Menu

FLOJET®

N5100 Series Industrial Air Driven Pump

INSTALLATION & OPERATION INFORMATION FOR MODELS N5100XXX

PRODUCT DATA

Pump Design .....Duplex Diaphragm
Wetted Parts
Diaphragm Material..... Santoprene®, Viton ®, Buna, or Geolast
Check Valve Material .....Santoprene®, Viton ®, Buna, or Geolast
Housing material .....Acetal Copolymer
Ports .....Gas Inlet & Outlet 1/4" (6.3 mm) Barb
Product Inlet 3/8" (9.5 mm) Barb
Product Outlet 3/8" (9.5 mm) Barb
Net Weight .....1.10 lb. (0.5 Kg)

® A registered trade mark of Monsanto Co.
® A registered trade mark of I.E. DuPont Co.

DESCRIPTION

FLOJET Industrial N5100 Series Pumps are designed for light general commercial and industrial applications. These pumps are constructed from a selection of materials for handling a broad range of chemicals*.

NOTE: Not to be used with any Fluids with a flash point below 100˚F (38˚C).

***For Chemical Compatibality of diaphragm material please refer to the Chemical Compatibility Guide referenced in F100-227.**

STANDARD MODELS

N5100-010 .....Buna
N5100-020 .....Viton®
N5100-040 .....Santoprene®
N5100-050 .....Geolast®

PERFORMANCE SPECIFICATIONS

PUMP

Liquid Temperature Min .....40°F (4°C)
.....Max .....120°F (49°C)
Priming .....Dry .....28 ft. (8.5 m)
.....Wet .....32 ft. (9.8 m)
Flow Rates .....Max .....Up to 2.5 GPM (9.5 LPM)
Gas Supply Pressure .....20 to 80 PSI (1.4 to 5.6 bar)
Noise Level .....Max 87dB

Santoprene®, Viton ®, Buna, or Geolast Material with 1/2" Ports

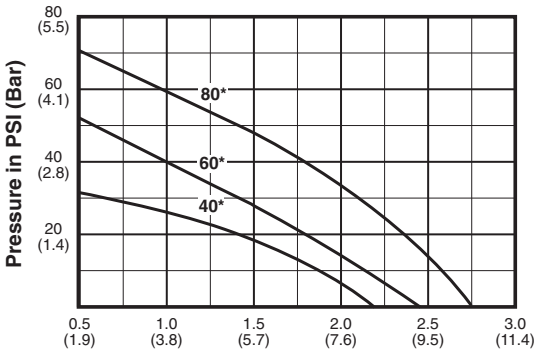

*Indicates Air Inlet Pressure in PSI

NOTE: For maximum running life do not exceed 80 PSI (5.5 bar) Gas Inlet Pressure

DIMENSIONAL DRAWING

Inches (millimeters)
Dimensional tolerances ± 0.06 inches
Consult factory if precise details are required.

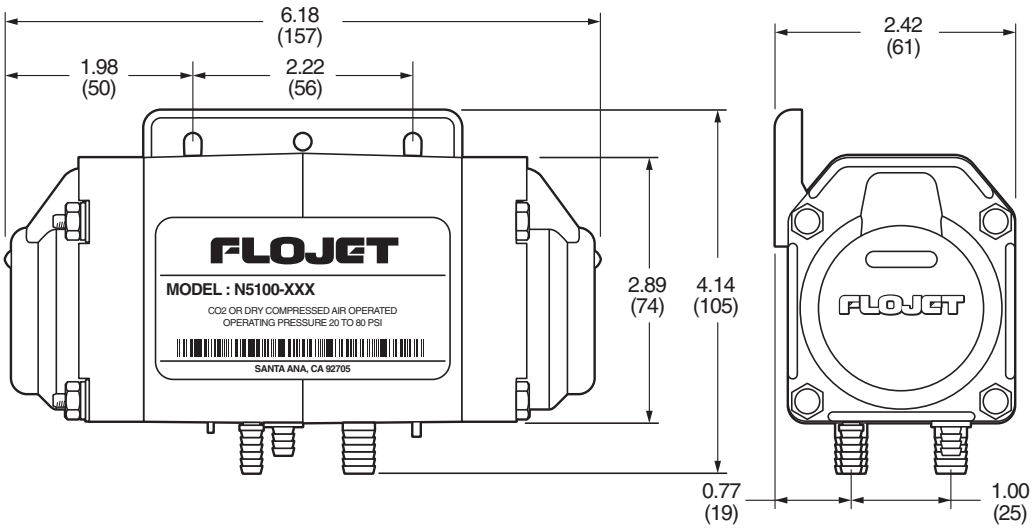

MOUNTING

The FLOJET N5100 Series self-priming pump should be mounted in a dry and adequately ventilated area. This pump can be mounted several feet from the tank, above or below the fluid level. For most applications, no more than 4 feet above the fluid level is recommended. **This is not a submersible pump.**

Secure Pump to desired fixture by screws through the mountng bracket. **Ports must be facing down.**

HOSE CONNECTIONS

Product In - Use 3/8” (10 mm), reinforced, flexible, non-collapsible hose or equivalent. Avoid sharp bends that could restrict flow or cause hose to collapse under vacuum.

Product Out - Use reinforced 3/8” (10 mm) I.D. hose for discharge tube.

Gas In - Make sure gas regulator is set at zero. Use reinforced 1/4” (6 mm) hose. connect “Gas In” to gas supply fitting on regulator. If pumps are installed in an enclosed area, it is recommended to connect a hose to the gas discharge port (exhaust) and vent gas to atmosphere. (Requires ‘small’ exhaust port)

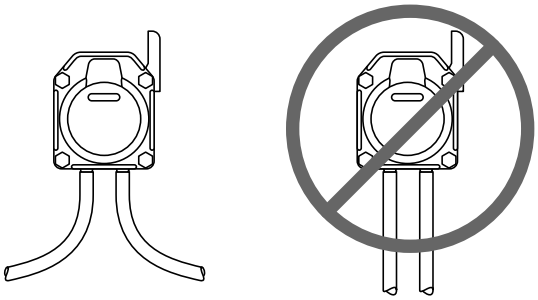

FLEXIBLE HOSE

RIGID PIPE

PLUMBING

Use a flexible hose to avoid excess stress on pump ports. DO NOT crimp or kink hose. All hose should be the same size as the pump port fittings.

All fittings must be compatible with fluid being pumped. It is recommended to use plastic fittings only.

The use of check valves in the plumbing system could interfere with the priming ability of the pump. If unavoidable, check valves in the pumping system must have a cracking pressure of 2 PSI or less.

Use a minimum 40 mesh strainer or filter in the tank or pump inlet line to keep large foreign particles out of the system.

OPERATION

At start-up, regulate gas pressure to desired setting. For most installations 20 PSI (1.4 bar) inlet will be adequate, although DO NOT go below 20 PSI (1.4 bar). Pump will operate according to air supply. Flow and pressure can be adjusted by increasing or decreasing gas pressure to accommodate varying product viscosities, length of lines or other installation conditions. Review flow curves located on page 1 for further assistance. High viscosity fluids and hose length will limit priming distance. **IF PUMP IS T0 BE USED IN HIGH FLOW, LOW PRESSURE APPLICATIONS, ADJUST GAS PRESSURE TO 20 PSI (1.4 BAR) ABOVE DISCHARGE PRESSURE.**

CONTINUOUS OPERATION AT 120°F (49°C) WILL REDUCE PUMP LIFE.

AIR MUST BE DRY AND OIL FREE.

Compressors must have dryers and/or a water separator in the air distribution system. Pumps that fail due to water in the air chamber will not be covered under the limited warranty.

GENERAL SAFETY INFORMATION

Protect yourself and others by observing all safety information. Follow all safety codes and the Occupational Safety and Health Act (OSHA).

WARNING

DO NOT PUMP GASOLINE OR FLAMMABLE LIQUIDS OR USE WHERE FLAMMABLE VAPORS ARE PRESENT.

If used with $C0_2$ or N_2 be sure the area is well ventilated.

CAUTION:

Do not clean or service FLOJET pumps, hoses or valves while the system is pressurized. Plastic CO_2 air inlet ports do not have a check valve. Prior to cleaning or servicing, purge the pump by carefully tilting the pump so ports are facing up and remove suction line from source. Turn air off and disconnect air inlet line. (Brass air inlet ports have a check valve.)

PREVENTIVE MAINTENANCE TIPS

Tips to help prolong your pump’s life.

- If pumping liquid other than water. pump should be flushed with water (if applicable) after every use.
- Before freezing conditions occur, pump must be liquid free.
- If mounting pump in an outdoor environment. shield pump from environmental extremes (i.e. sunlight. water from washdown spray, rain, etc.).
- When using an air compressor, use an inline air dryer placed before the pump to limit water build-up.

MODEL N5100 SERIES EXPLODED VIEW

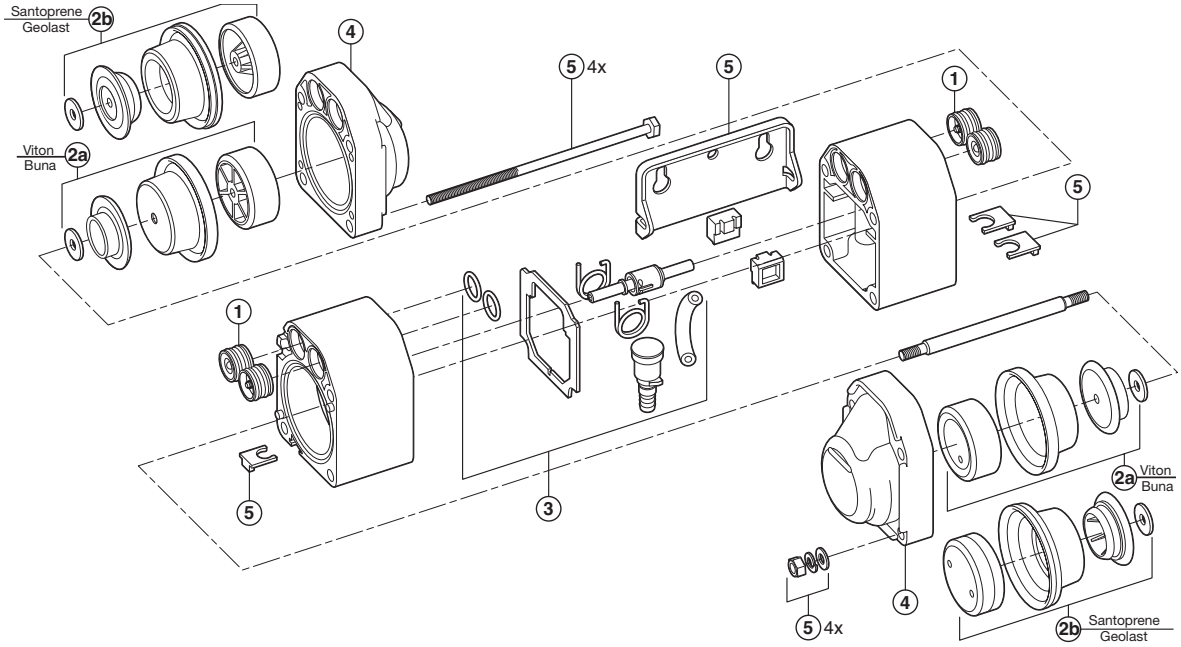

Key	Part No.	Description	Qty
1	20467-005	Kit, Check Valve Assembly, Buna	4
	20467-006	Kit, Check Valve Assembly, Viton®	4
	20467-007	Kit, Check Valve Assembly, Santo®	4
	20467-008	Kit, Check Valve Assembly, Geolast	4
2a	20466-005	Kit, Diaphragm (incl. Pistons), Buna	2
	20466-006	Kit, Diaphragm (incl. Pistons), Viton®	2
2b	20466-007	Kit, Diaphragm (incl. Pistons), Santo®	2
	20466-008	Kit, Diaphragm (incl. Pistons), Geolast	2

Key	Part No.	Description	Qty
3	20469-005	Kit, Spool Valve & Springs, Buna	1
	20469-006	Kit, Spool Valve & Springs, Viton®	1
	20469-007	Kit, Spool Valve & Springs, EPDM	1
	20469-008	Kit, Spool Valve & Springs, Geolast	1
4	20468-005	Kit, End Caps	2
5	20465-001	Kit, Hardware	1

****For optional port fittings, see F100-112****

DISASSEMBLY PROCEDURE

Remove all gas lines and suction/discharge fittings from pump. This is accomplished by using a flatbladed screwdriver. Slide the retaining clips away from the gas "in," suction and discharge fittings. Then pull the fitting away from pump body.

Using a 5/16" (8 mm) socket, remove the 4 nuts and washers and pull out the body bolts.

The end caps, mounting brackets will separate from the pump. Grab a piston in each hand and twist each side counterclockwise. Remove the piston, diaphragm, piston seal and retaining washer from one side of the drive shaft.

Place drive shaft into a vise with wood block jaws and rotate counterclockwise to release old diaphragm. Install new diaphragm and hand tighten.

CAUTION: Do not damage the surface of the drive shaft.

Using a razor blade or sharp knife, cut label on the front of the pump along the seam in center of body.

With pump label facing you, slowly pull body apart. Disconnect exhaust hose from muffler and pull spool valve stem from body. Discard body gasket and old spool valve subassembly.

To assemble new spool valve subassembly, insert internal exhaust hose spring into exhaust hose. Connect hose to spool valve. Mount torsion springs into spool valve straight side first. Push torsion springs through spool valve to bent/hook end. Lubricate spool valve stem and insert stem into left side of pump body making sure torsion springs are positioned in retaining niches. Carefully push spool valve into pump until torsion springs snap inward and lock into place. Reconnect exhaust hose to muffler fitting.

CAUTION: If exhaust hose is not reconnected to muffler fitting, pump will not operate.

Position new body gasket and the two o-rings and press pump body together. Reinsert gas "in" fitting, discharge and suction fitting into pump and slide retainer clips over fittings until they snap into place. This will help hold the pump together during assembly.

Lubricate and carefully reinsert the drive shaft through the pump body. Install new diaphragm and piston assembly onto drive shaft and hand tighten. Note positioning and direction each part is facing.

Position end caps onto pump body. Insert body bolts through pump body. Install washer, split washer and hex nut on each bolt.

Note: Remember to insert mounting bracket into niches on the body before installing end caps and bolts.

With a 5/16" (8 mm) nut driver, alternately tighten each body bolt maintaining even pressure around pump body. Using a 5/16" (8 mm) torque wrench tighten body bolts to 20 inch lbs.

TROUBLESHOOTING CHART

Symptom	Possible Cause(s)	Corrective Action
Pump will Pump will not start (stalls)	1. Inadequate air supply (20 PSI Min.) 2. Contaminated air supply 3. Ruptured diaphragm (2) 4. Check spool valve for wear	1. Increase air inlet pressure 2. An air dryer might be required 3. Replace diaphragm (2) 4. Replace spool valve if necessary
Pump runs, but no fluid	1. A leak or break in the product inlet line 2. A leak or break in the product discharge line	1. Replace product line 2. Replace product line
Pump leaks through exhaust port	1. Leak at upper exhaust port o-ring 2. Inadequate slide lubrication	1. Replace exhaust port 2. Replace with spool valve kit
Flow rate is low	1. Tubing or hose is damaged or blocked 2. Check viscosity of medium being pumped 3. Check valves not seated correctly (1)	1. Clean or replace 2. Reduce viscosity of medium, increase hose diameter or contact factory for recommendation 3. Reinstall check valves (1)
Pump leaks	1. Ruptured or worn out diaphragm (2) 2. Pump housing screws not torqued adequately	1. Replace diaphragm (2) 2. Torque screws to 20 in lb

WARRANTY

FLOJET warrants this product to be free of defects in material and/or workmanship for a period of one year after purchase by the customer from FLOJET. During this one year warranty period, FLOJET will at its option, at no charge to the customer, repair or replace this product if found defective, with a new or reconditioned product, but not to include costs of removal or installation. No product will be accepted for return without a return material authorization number. All return goods must be shipped with transportation charges prepaid. This is only a summary of our Limited Warranty. For a copy of our complete warranty, please request Form No. 100-101.

RETURN PROCEDURE

Prior to returning any product to FLOJET, call customer service for an authorization number. This number must be written on the outside of the shipping package. Place a note inside the package with an explanation regarding the reason for return as well as the authorization number. Include your name, address and phone number.

www.flojet.com

ITT

Engineered for life

U.S.A.
Flojet
666 E. Dyer Rd.
Santa Ana, CA 92705
Phone: 714.557.4700
Fax: 714.628.8478

UNITED KINGDOM
Flojet
Bingley Road, Hoddesdon
Hertfordshire EN11 OBU
Tel: +44 (0) 1992 450145
Fax: +44 (0) 1992 467132

CANADA
Fluid Products Canada
55 Royal Road
Guelph, Ontario N1H 1T1
Tel: 519 821.1900
Fax: 519 821.2569

JAPAN
NHK Jabsco Company Ltd.
3-21-10, Shin-Yokohama
Kohoku-Ku, Yokohama, 222
Tel: 045.475.8906
Fax: 045.475.8908

GERMANY
Jabsco GmbH
Oststrasse 28
22840 Norderstedt
Tel: +49-40-53 53 73 -0
Fax: +49-40-53 53 73 -11

ITALY
Jabsco Marine Italia
Via Tommaseo, 6
20059 Vimercate, Milano
Tel: +39 039 685 2323
Fax: +39 039 666 307

Copyright 2007, ITT Corporation Printed in U.S.A. All Rights Reserved
Form: 81000-363 Rev. F 05/2008